Edspert.id

Smart Green House Berbasis IoT Mobile Apps

Intensive Bootcamp IoT Batch-10

Nama : Devan Cakra Mudra Wijaya, S.Kom.

1. Latar Belakang

Coming Soon….

2. Tujuan & Manfaat

Coming Soon….

3. Infrastruktur IoT

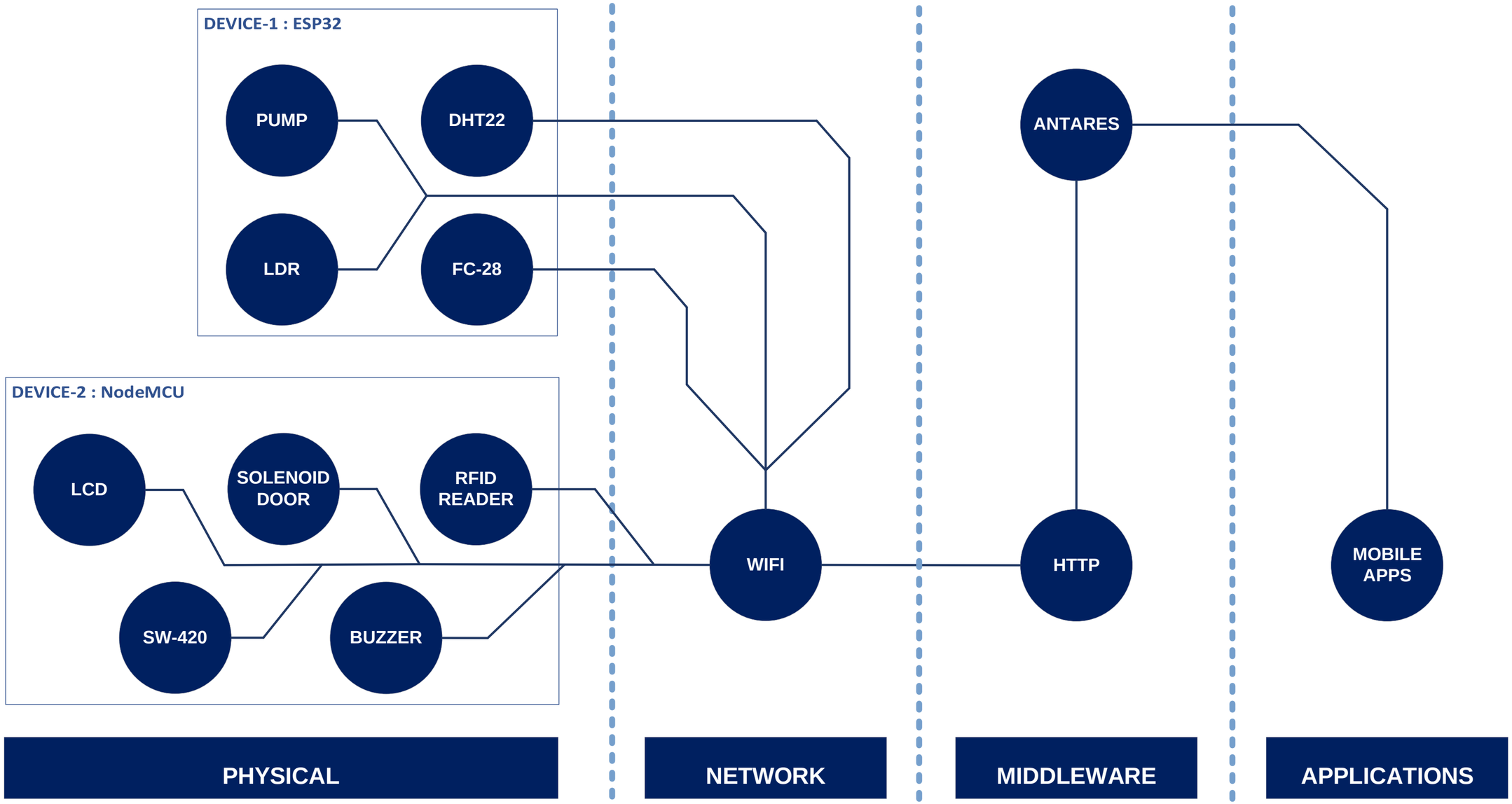

4. Flowchart

Coming Soon….

5. Wiring Device-1 : ESP32

	ESP32
DHT22	• VCC ⟶ 3.3V • GND ⟶ GND • SDA ⟶ GPIO13
FC-28	• VCC ⟶ 3.3V • GND ⟶ GND • AO ⟶ GPIO36
LDR	• VCC ⟶ 3.3V • R-BEFORE ⟶ GPIO35 • R-AFTER ⟶ GND
RELAY MODULE	• VCC, COM ⟶ 5V • GND ⟶ GND • IN ⟶ GPIO4

	RELAY MODULE
PUMP	• VCC ⟶ NO • GND ⟶ GND

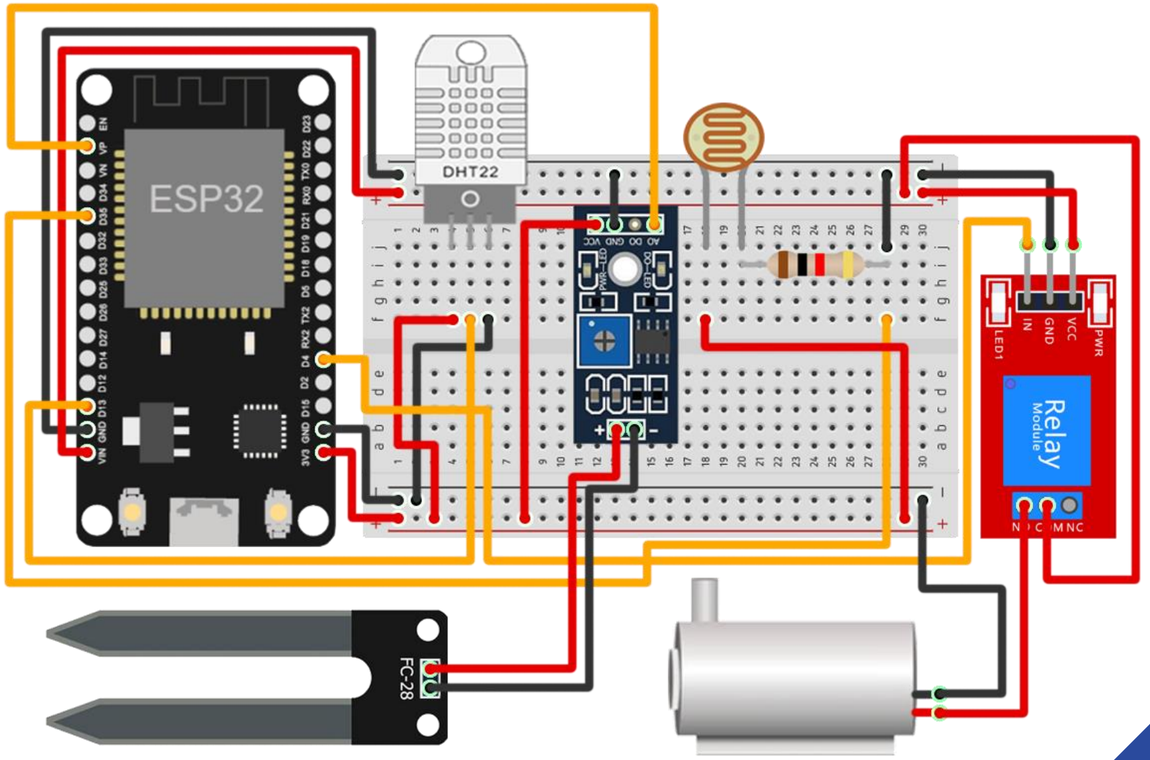

6. Wiring Device-2 : NodeMCU

	TEGANGAN PLN
POWER SUPPLY	• L ⟶ 220V • N ⟶ N

	POWER SUPPLY
LM2596 STEP DOWN (1)	• 12V ⟶ 12V 0.5A • GND ⟶ GND
LM2596 STEP DOWN (2)	• 12V 0.5A ⟶ 5V 1A • GND ⟶ GND

	LM2596 STEP DOWN (1)
RELAY MODULE	• COM ⟶ 12V 0.5A

	NODEMCU
LM2596 STEP DOWN (2)	• VCC ⟶ 5V 1A • GND ⟶ GND
BUZZER	• VCC ⟶ D3 • GND ⟶ GND
LCD	• GND ⟶ GND • VCC ⟶ 5V • SDA ⟶ D2 • SCL ⟶ D1
RELAY MODULE	• VCC ⟶ 5V • GND ⟶ GND • IN1 ⟶ D4

	NODEMCU
RFID READER	• SDA ⟶ D2 • SCK ⟶ D5 • MOSI ⟶ D7 • MISO ⟶ D6 • GND ⟶ GND • RST ⟶ D1 • VCC ⟶ 3.3V
SW-420	• VCC ⟶ 5V • GND ⟶ GND • DO ⟶ D8

	RELAY MODULE
SOLENOID DOOR	• VCC ⟶ NO • GND ⟶ GND

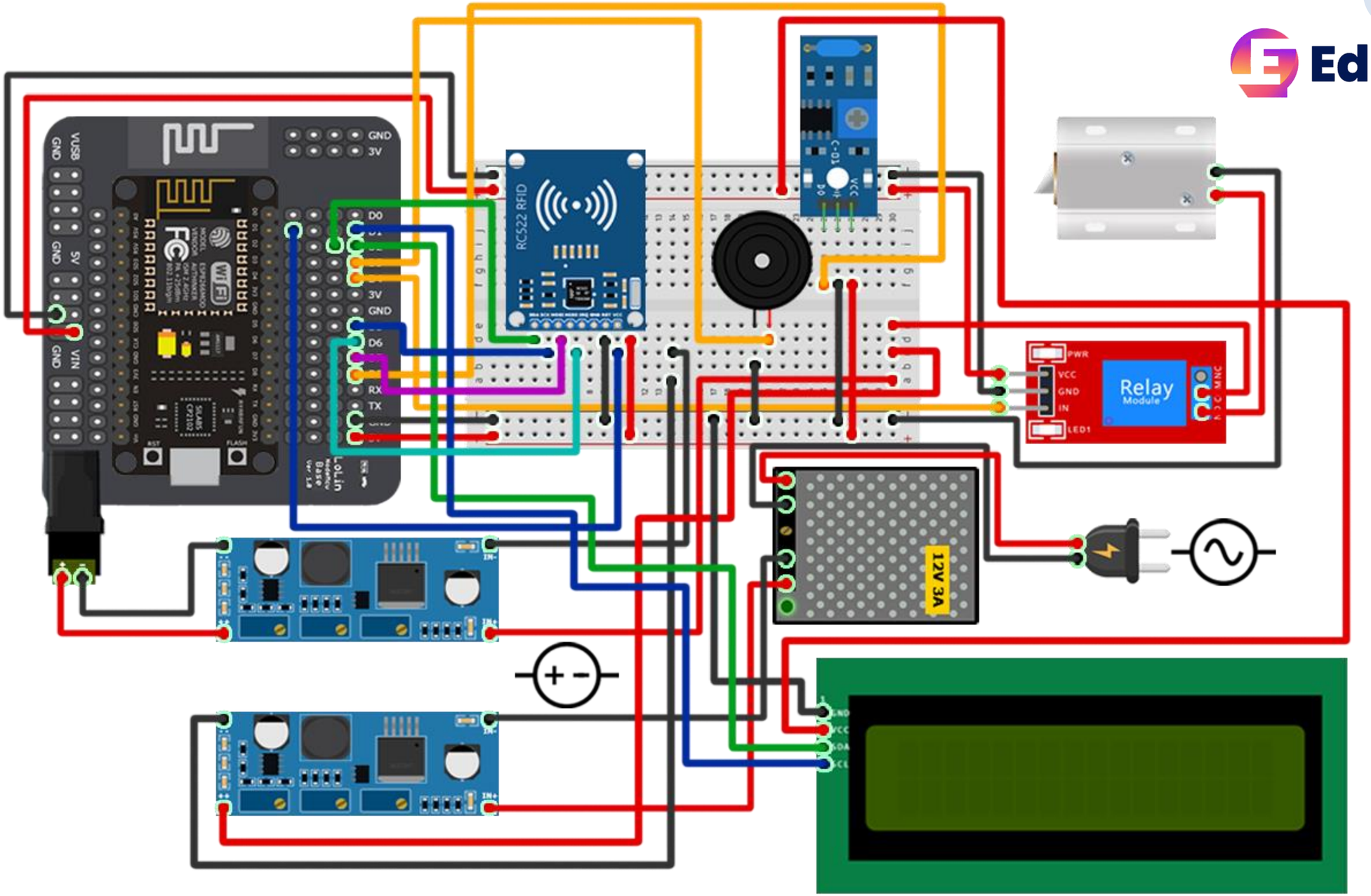
GND
3V
VUSB
GND
5V
GND
VIN
GND
D0
3V
GND
D6
RX
TX
RC522 RFID
Relay
Module
PWR
VCC
GND
IN
LED1
12V 3A

5. Hasil & Pembahasan

Coming Soon….

6. Kesimpulan & Saran

Coming Soon….

7. Daftar Pustaka

Coming Soon….

Edspert.id

Smart Green House Berbasis IoT Mobile Apps

Intensive Bootcamp IoT Batch-10

Nama : Devan Cakra Mudra Wijaya, S.Kom.